algorithms

IMPACT FACTOR 2.1

CITESCORE 4.5

Article

Enhancing Arabic Sentiment Analysis of Consumer Reviews: Machine Learning and Deep Learning Methods Based on NLP

Hani Almaqtari, Feng Zeng and Ammar Mohammed

Topic

Multimodal Sentiment Analysis Based on Deep Learning Methods Such as Convolutional Neural Networks

Edited by

Dr. Junaid Baber, Dr. Ali Shariq Imran, Prof. Dr. Sher Doudpota and Dr. Maheen Bakhtyar

MDPI

https://doi.org/10.3390/a17110495

algorithms

MDPI

Article

Enhancing Arabic Sentiment Analysis of Consumer Reviews: Machine Learning and Deep Learning Methods Based on NLP

Hani Almaqtari [1,2,*], Feng Zeng [1,*] and Ammar Mohammed [1]

[1] School of Computer Science and Engineering, Central South University, Changsha 410083, China; ammarnassr@csu.edu.cn
[2] Faculty of Computers and Information Technology, Taiz University, Taiz P.O. Box 6803, Yemen
* Correspondence: hani.f.almaqtari@taiz.edu.ye (H.A.); fengzeng@csu.edu.cn (F.Z.)

Abstract: Sentiment analysis utilizes Natural Language Processing (NLP) techniques to extract opinions from text, which is critical for businesses looking to refine strategies and better understand customer feedback. Understanding people's sentiments about products through emotional tone analysis is paramount. However, analyzing sentiment in Arabic and its dialects poses challenges due to the language's intricate morphology, right-to-left script, and nuanced emotional expressions. To address this, this study introduces the Arb-MCNN-Bi Model, which integrates the strengths of the transformer-based AraBERT (Arabic Bidirectional Encoder Representations from Transformers) model with a Multi-channel Convolutional Neural Network (MCNN) and a Bidirectional Gated Recurrent Unit (BiGRU) for Arabic sentiment analysis. AraBERT, designed specifically for Arabic, captures rich contextual information through word embeddings. These embeddings are processed by the MCNN to enhance feature extraction and by the BiGRU to retain long-term dependencies. The final output is obtained through feedforward neural networks. The study compares the proposed model with various machine learning and deep learning methods, applying advanced NLP techniques such as Term Frequency-Inverse Document Frequency (TF-IDF), n-gram, Word2Vec (Skip-gram), and fastText (Skip-gram). Experiments are conducted on three Arabic datasets: the Arabic Customer Reviews Dataset (ACRD), Large-scale Arabic Book Reviews (LABR), and the Hotel Arabic Reviews dataset (HARD). The Arb-MCNN-Bi model with AraBERT achieved accuracies of 96.92%, 96.68%, and 92.93% on the ACRD, HARD, and LABR datasets, respectively. These results demonstrate the model's effectiveness in analyzing Arabic text data and outperforming traditional approaches.

Keywords: machine learning; Arabic sentiment analysis; deep learning; transformer models; natural language processing; word embedding

check for updates

Citation: Almaqtari, H.; Zeng, F.; Mohammed, A. Enhancing Arabic Sentiment Analysis of Consumer Reviews: Machine Learning and Deep Learning Methods Based on NLP. *Algorithms* **2024**, *17*, 495. https://doi.org/10.3390/a17110495

Academic Editor: Frank Werner

Received: 2 June 2024
Revised: 7 October 2024
Accepted: 10 October 2024
Published: 3 November 2024

Copyright: © 2024 by the authors. Licensee MDPI, Basel, Switzerland. This article is an open access article distributed under the terms and conditions of the Creative Commons Attribution (CC BY) license (https://creativecommons.org/licenses/by/4.0/).

1. Introduction

Sentiment analysis is critical for understanding customer sentiments about products and services, providing companies with valuable insights that can enhance customer satisfaction, improve brand image, and boost profitability [1]. As more people express their opinions online, robust sentiment analysis tools become increasingly vital, particularly in the context of large volumes of user-generated content on platforms like Twitter, Facebook, and e-commerce websites. Sentiment analysis, also known as opinion mining, involves extracting subjective information from text, and interpreting attitudes, emotions, and sentiments expressed through written or spoken language. This process enables organizations to understand public perception, track brand reputation, identify trends, and make data-driven decisions using machine learning (ML) and deep learning (DL) algorithms. While sentiment analysis is well-established in languages like English and Chinese, Arabic presents unique challenges due to its intricate morphology, diverse dialects, and complex syntax [2]. Traditional machine learning approaches often struggle to accurately interpret Arabic text, particularly with context-dependent meanings, morphological complexities,

and nuanced expressions of sentiment, including negations and ambiguities. Addressing these challenges is essential for improving the accuracy and applicability of sentiment analysis in Arabic.

Moreover, recent advancements in deep learning, particularly in technologies such as Convolutional Neural Networks (CNNs), Recurrent Neural Networks (RNNs), Long Short-Term Memory (LSTM) networks, and Gated Recurrent Units (GRUs), have revolutionized text analysis by effectively extracting features and capturing intricate patterns in text data [3,4]. These models excel in learning hierarchical representations, making them highly effective in text classification tasks, including sentiment analysis in Arabic. Furthermore, the integration of contextualized word embeddings from models like Word2Vec, fastText, and Arabic Bidirectional Encoder Representations from Transformers (AraBERT) has significantly enhanced the performance of DL models in Arabic sentiment analysis [5,6]. These embeddings encode semantic nuances and contextual relationships in text, thereby improving the accuracy and efficiency of sentiment classification tasks. Additionally, transformer models, such as BERT, have gained significant popularity due to their ability to capture contextual relationships within sentences through self-attention mechanisms, allowing for a better understanding of context and enhancing model performance. The attention mechanism in transformers allocates different levels of importance to various parts of the input, revolutionizing the processing of long sequential data, leading to notable improvements in accuracy and result quality. This research aims to further advance Arabic sentiment analysis by leveraging these advanced deep learning architectures and methodologies, addressing the complexities of the Arabic language and its diverse dialects [7,8].

In this paper, we propose the Arb-MCNN-Bi Model (which combines AraBERT, a Multi-channel Convolutional Neural Network (MCNN), and a Bidirectional Gated Recurrent Unit (BiGRU)). This model integrates the strengths of the transformer-based AraBERT model with an MCNN and a BiGRU. The proposed approach consists of three stages: text preprocessing and data cleaning, extracting sentence-level semantics and contextual features using the pre-trained AraBERT model, and feeding the contextually embedded vectors into a neural network. To further enhance sentiment analysis, we incorporate various word embedding techniques, such as Word2Vec and fastText, alongside advanced architectures, including the MCNN and BiGRU framework. Each of these components is carefully designed to improve model generalization and effectively process sequential and contextual text data, which is critical for Arabic sentiment analysis.

Moreover, this study compared our model with various ML and DL methods using advanced Natural Language Processing (NLP) techniques such as Term Frequency-Inverse Document Frequency (TF-IDF), n-gram, AraBERT, Word2Vec (Skip-gram), and fastText (Skip-gram). The Arb-MCNN-Bi model is evaluated across three different datasets containing reviews in various Arabic dialects and compared to state-of-the-art models based on accuracy, precision, recall, and F1-score values. Through extensive experimentation and model optimization, the effectiveness of the Arb-MCNN-Bi model is demonstrated. These concerted efforts make a significant contribution to the field of Arabic sentiment analysis (ASA), with the following key actions:

- Proposing a novel Arb-MCNN-Bi model: this model integrates the AraBERT pre-trained language model with multichannel convolutional layers and BiGRU units, capturing both local and global dependencies within Arabic textual data.
- Comprehensive Comparative Analysis: the research provides a thorough comparison of the proposed model against various traditional ML and DL algorithms, utilizing advanced NLP techniques such as TF-IDF, n-gram, Word2Vec (Skip-gram), and fastText (Skip-gram).
- The assessment of the model's performance across three diverse Arabic datasets: Arabic Customer Reviews Dataset (ACRD), Large-scale Arabic Book Reviews (LABR), and the Hotel Arabic Reviews dataset (HARD), demonstrating its robustness and generalizability.

2. Related Works

Most approaches for conventional and deep learning techniques are tailored to English. Consequently, this research focuses on analyzing Arabic sentiment using transformer architecture, DL, and ML techniques. This section reviews recent competitive sentiment analysis methodologies using transformers, and DL and ML models for Arabic and other languages. It also discusses Arabic models employing the HARD and LABR datasets.

2.1. Arabic Language

In study [7], the authors applied ML models to classify Arabic YouTube comments, achieving the highest performance accuracy of 94.62% with Naïve Bayes. The authors of [8] researched Saudi Arabian citizens' opinions using ML and sentiment analysis on a sizeable Arabic user review dataset. They found that the K-Nearest Neighbors (KNN) method achieved the highest accuracy, at 78.46%. The authors in [9] curated a dataset of 15,050 Arabic YouTube comments, focusing on detecting antisocial behavior in Arabic online interactions, and achieved a 90.05% success rate with Support Vector Machine (SVM) classification. Alharbi et al. [10] developed a DL model combining LSTM, GRU, and ensemble methods for ASA. It converts text into vectors using pre-trained embeddings, extracts features with LSTM and GRU, and combines their outputs via voting for sentiment classification. Evaluated on six datasets, it achieved a top accuracy of 94.32%, outperforming existing benchmarks. Muaad et al. [11] introduced ArCAR, a DL model for character-level Arabic text recognition using a Convolutional Neural Network (CNN) with six layers and two fully connected layers. Tested on datasets, including a HARD binary classification (balanced) and a three-class classification (imbalanced), the model achieved accuracies of 93.58% and 93.23%, respectively. In another study [12], the LSTM algorithm was evaluated on an Arabic Tweet dataset from the University of California, Irvine Machine Learning Repository (UCI ML Repository). The LSTM classified tweets into positive and negative sentiments, achieving 89.8% accuracy, surpassing previous studies using traditional ML methods on the same dataset. Mohammed et al. [13] used a DL approach to analyze sentiment in Arabic tweets, focusing on both Modern Standard Arabic and Egyptian dialects. They created an annotated corpus categorizing tweets into positive and negative sentiments. Among CNN, LSTM, and RCNN techniques, LSTM performed best with an accuracy of 81.31%.

Moreover, Ombabi et al. [14] introduced a novel deep-learning model that integrates a single layer of the CNN algorithm with two layers of the LSTM algorithm to analyze the sentiment of Arabic tweets. The model employs fastText (Skip-gram) word embedding as the input layer to transform words into vectors. To enhance the results, the model's output is further processed using the SVM technique. This proposed model showed impressive performance, achieving an accuracy of 90.75%. Study [15] examined Arabic dialectal sentiment analysis using a hybrid deep neural network combining bi-directional LSTM and CNN. Tested on Arabic Sentiment Tweets Dataset (ASTD), Shami-Senti, and LABR datasets, the model notably achieved 93.5% accuracy on Shami-Senti, outperforming baseline models. Elhassa et al. [16] explored the challenges and methodologies in ASA, focusing on the unique morphological complexities and dialectal variations of the language. Their study employed DL algorithms, including CNNs, long short-term memory (LSTM), and a hybrid CNN-LSTM model. They utilized word embeddings like Word2Vec and fastText to enhance model performance rather than relying on hand-crafted features. Evaluating their models on the Hotel Arabic Reviews Dataset (HARD) and the Large-Scale Arabic Book Reviews (LABR) dataset, they demonstrated that the fastText embedding, particularly with the HARD 2-imbalance dataset, achieved superior results. Their CNN model, in particular, achieved notable accuracy rates, outperforming other models and existing state-of-the-art results on the same datasets.

Multiple recent studies [17,18] have trained the BERT model using Arabic data from Wikipedia and the Oscar dataset. Additionally, other studies [19,20] have fine-tuned the Arabic BERT model from reference [17] specifically for sentiment analysis. Researchers [21]

achieved an impressive accuracy of 95.7% in ASA using hULMonA and multilingual BERT, highlighting their effectiveness in NLP tasks. Alghamdi et al. [22] explored sentiment analysis of Arabic tweets about the Hajj pilgrimage, utilizing ML and DL models over six years. Their study involved preprocessing, feature extraction, and sentiment classification of a large dataset of tweets. They discovered that BERT, a transformer-based model, outperformed other models in accurately classifying sentiment, effectively capturing the complexities of Arabic text. Habbat et al. [23] proposed a DL ensemble model for sentiment analysis, using GRU, LSTM, and BiLSTM as base classifiers with AraBERT for embeddings and SVM as the meta-classifier. They also employed AraGPT for data augmentation. The model achieved accuracy rates of 88.89% on HARD, 90.88% on BRAD, and 88.23% on Twitter datasets, outperforming state-of-the-art models.

Boulouard et al. [24] addressed the detection of hateful and offensive speech on Arabic websites and social media platforms using a transfer learning approach. They compared the performance of various BERT-based models trained to classify comments as abusive or neutral. They utilized a dataset containing comments in standard Arabic and four dialects alongside their English translations. The models were evaluated using metrics such as accuracy, precision, recall, F1-score, and confusion matrix, highlighting the need for advanced solutions in Arabic-speaking online communities where controlling offensive speech remains less developed.

2.2. Other Languages

The authors in [25] use text preprocessing for event detection (ED) and sentiment analysis (SA). Their method extracts events and sentiments, labels events with frequent sentiments, and combines Network Analysis and ML to identify topics and determine sentiments. Evaluation uses Logistic Regression (LR) and Support Vector Machines (SVMs), with LR being faster. In study [26], the authors propose a sentiment analysis method using topic–document embeddings. They preprocess text, create word vectors, compute term weights, and extract main themes. Sentiment is detected using Logistic Regression (LOGREG) and Long Short-Term Memory (LSTM) models. Evaluation with accuracy, precision, and recall enhances understanding of sentiment in text data. Truică et al. [27] propose the DocTopic2Vec model for sentiment analysis, combining Doc2Vec and Topic Modeling. They create word embeddings using Word2Vec, fastText, and GloVe using game reviews, enriching Doc2Vec with local context. Topic2Vec embeddings are generated using Latent Dirichlet allocation (LDA), Non-Negative Matrix Factorization (NMF), and Latent Semantic Indexing (LSI). The DocTopic2Vec model integrates these embeddings for improved accuracy. They design six new Convolutional-based (Bidirectional) Recurrent Deep Neural Networks, which outperform traditional models in benchmarks.

The authors in [28] propose Event Detection Sentiment Analysis Ensemble (EDSA-Ensemble), an architecture that enhances sentiment analysis and event detection on social media by combining these techniques. EDSA-Ensemble improves sentiment polarity detection for current events using Information Diffusion techniques, which account for both the period and topics of events to provide a comprehensive understanding of online social network dynamics. Apostol et al. [29] propose the Aspect Term Extraction and Sentiment Analysis using a heterogeneous ensemble learning model with BERT and BART (ATESA-BÆRT) model, an ensemble learning approach for Aspect-Based Sentiment Analysis (ABSA). By dividing ABSA into Aspect Term Extraction and Aspect Term Sentiment Analysis, and using argmax multi-class classification with six transformer-based learners, the model combines predictions from multiple base learners. Initial experiments show that ATESA-BÆRT outperforms state-of-the-art solutions, effectively handling multiple aspects within reviews.

3. Methodology

Figure 1 illustrates the methodological framework for ASA, beginning with data collection from the ACRD, LABR, and HARD datasets, followed by preprocessing steps

like text cleaning and tokenization. Feature extraction employs techniques such as TF-IDF, n-gram, Word2Vec, fastText, and AraBERT. We propose a model using AraBERT for word embeddings processed through the MCNN and a BiGRU model, enhancing feature extraction and retaining long-term dependencies. The model is compared with various ML and DL algorithms using advanced NLP techniques and evaluated on metrics like precision, recall, F1-score, and accuracy.

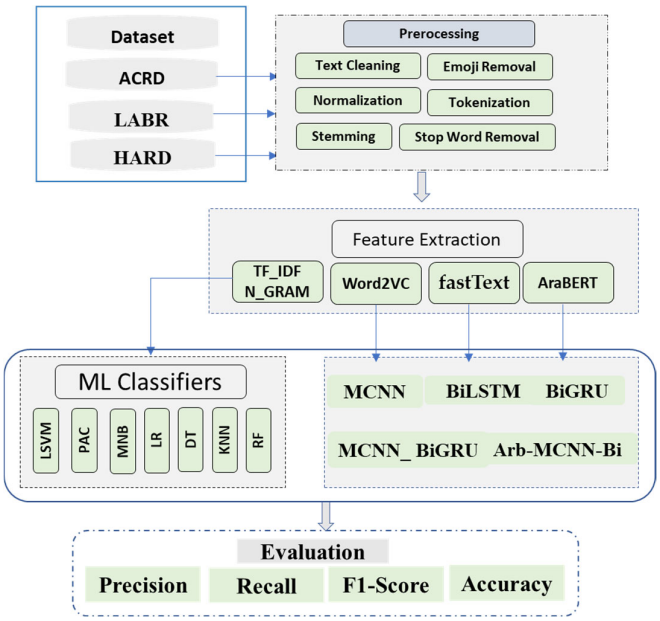

Figure 1. Methodological Framework for Sentiment Analysis in Arabic Texts.

3.1. Dataset Overview

Our research utilized three diverse datasets, each sourced from distinct origins and featuring various Arabic dialects to represent speakers from different countries. Notably, all datasets maintain balanced class distributions as shown in Table 1.

(1) ACRD: Arabic Consumer Reviews Dataset. Through a comprehensive initiative, we collected approximately 52,300 consumer reviews from Amazon. This extensive dataset facilitated a thorough analysis of consumer sentiments.

(2) HARD: The Hotel Arabic Reviews Dataset [30] comprises 93,700 reviews sourced from 1858 hotels. These reviews were provided by 30,899 customers and collected in 2016. Each review in the dataset has been labeled as either positive or negative.

(3) LABR: The Large-Scale Arabic Book Reviews [31] comprises 63,000 book reviews written in Arabic. Reviews rated 1 and 2 are considered negative, while those rated 4 and 5 are categorized as positive.

3.2. Data Annotation

For the Arabic Consumer Reviews dataset, a skilled team of three native Arabic speakers meticulously categorized the reviews into positive and negative groups. After a thorough examination, 35,200 were deemed positive and 17,100 negative. Validation via Fleiss' kappa method yielded a high score of 0.834, confirming strong agreement among annotators, with the large size, balanced composition, and high reliability.

3.3. Preprocessing

Preprocessing is an important step because it cleans and refines the dataset in preparation for subsequent training. Our dataset includes Arabic consumer reviews written in various dialects. To address the issues with Arabic language comments, we used NLP techniques such as normalization, stemming, and stop word removal, as shown in Figure 1.

- Text Cleaning: The first step is to clear the text of any extraneous elements. This includes removing special symbols, punctuation marks, diacritics, non-Arabic letters, and numbers. Additionally, embedded URLs are detected and removed. This cleansing phase is critical in ridding the text of unnecessary information, thereby reducing the complexity inherent in Arabic script.
- Emoji Removal: Because of the nature of our analysis, emojis are considered non-essential. As a result, a dedicated process is used to identify and remove these characters, ensuring that the focus is solely on the textual content.
- Normalization: Normalization is an essential step in processing Arabic text. This entails standardizing various forms of the same letter into a consistent model. Such normalization is critical in addressing the Arabic language's morphological richness, thereby improving dataset uniformity and comparability.
- Tokenization: Tokenization is a critical step in text analysis, particularly for reducing typographical variations in words. It significantly improves feature extraction processes such as Bag of Words (BOW) [32] and is helpful for n-gram, co-occurrence analysis, and stemming. Tokenization typically uses delimiters such as spaces, tabs, and newlines. Punctuation, such as commas, question marks, and exclamation points, can also serve as delimiters in informal Arabic on social media due to their unconventional use. Tokenization makes it easier to accurately tally word frequencies, which is important for understanding text content and structure in NLP.
- Stop Word Removal: During this phase, stop words in Arabic are filtered out. Stop words are frequently used words that are excluded from NLP due to their minimal semantic contribution.
- Stemming: Stemming is the final step in the preprocessing pipeline. We used the ISRIStemmer to reduce words to their base or root form, which is especially useful in linguistic analyses because it combines multiple word forms into a single representation.

3.4. Feature Extraction Methods

3.4.1. Machine Learning Models

- Term Frequency-Inverse Document Frequency (TF-IDF): TF-IDF is employed for text reorganization and feature extraction. Term frequency (TF) highlights the frequency of a word within a specific document. In contrast, inverse document frequency (IDF) measures the rarity or commonness of the word across the entire document corpus. This combination helps in identifying important words in a document while reducing the impact of commonly used words.
- n-gram: The n-gram method aids in understanding context by examining word sequences. n-grams are sequences of 'N' words, where 'N' can be any integer. For example, unigrams are single words, bigrams are pairs of words, and trigrams are sequences of three words. This method is beneficial for spellchecking, text prediction, and contextual analysis. In this research, we use n-grams with a range of 1 to 3 (unigrams, bigrams, and trigrams) to capture a broader context and improve text analysis.

3.4.2. Deep Learning

- AraBERT is a transformer-based model specifically designed for Arabic language understanding, developed by researchers from the University of Maryland and King Abdulaziz University. Utilizing the Bidirectional Encoder Representations from Transformers (BERT) architecture introduced by Google in 2018, AraBERT captures contextual relationships between words using self-attention mechanisms. Pre-trained on a vast corpus, including 1 billion tokens from the Open Source International Arabic News (OSLAN) corpus and 1.5 billion words from major news outlets, it effectively learns the linguistic features and statistical trends in Arabic. AraBERTv0.2 employs a segmented approach to word embeddings, breaking words into stems, prefixes, and suffixes to address lexical sparsity. This model generates robust word embeddings

by averaging activations from its layers, providing valuable input for various classification tasks. By leveraging the strengths of BERT's encoder, AraBERT delivers advanced, deep, and unsupervised bidirectional language representations, making it highly effective for ASA and other NLP tasks.

- Word2Vec is a framework leveraging CBOW (Continuous Bag of Words) and SG (Skip-gram) models, which is pivotal for sentiment analysis in textual data processing. CBOW excels in generalization by predicting words based on context. At the same time, SG focuses on understanding the context of a given word, revealing syntactic and semantic patterns crucial for nuanced sentiment detection. Using the Skip-gram model, our research explores the effects of dimensionality and contextual scope, with window size (5) and vector dimension (300).
- The fastText model, leveraging subword features like infixes, suffixes, and prefixes, significantly enhances ASA by addressing out-of-vocabulary issues and the language's complex morphology [33]. Treating words as character n-grams, fastText captures morphological nuances valuable for agglutinative languages. We generate sentiment-focused word embeddings using CBOW and SG techniques, with SG models enhancing contextual understanding and CBOW models deepening language structure comprehension. Our research uses the Skip-gram model to examine the effects of dimensionality and contextual scope, with a window size of 40 and a vector dimension of 300.

3.4.3. Hyper-Parameter Tuning

Hyper-parameter tuning is crucial as these parameters, which are set manually rather than learned from the data, dictate the behavior and efficacy of the learning algorithm. However, choosing the right hyper-parameters is complex, as their optimal values depend on both the data characteristics and the algorithm's learning capacity. Moreover, appropriate hyper-parameters significantly influence the model's ability to generalize and yield accurate predictions. Therefore, the process involves meticulously testing various hyper-parameter combinations to identify the most effective settings that enhance model performance, typically assessed on a validation set or through cross-validation methods. Among tuning techniques, grid search is favored in many classical ML scenarios for its simplicity and comprehensiveness. It methodically explores every potential combination within a defined grid, ensuring that no possible option is overlooked, thereby increasing the likelihood of discovering the optimal configuration.

- Grid search optimization: In our research, we utilize a grid search to fine-tune hyper-parameters. This method thoroughly explores all parameter combinations within a grid, employing cross-validation to pinpoint optimal hyperparameters. It ensures a comprehensive exploration of the configuration space, ultimately improving model performance. Moreover, the simplicity and effectiveness of grid searches are underscored by our experiment, where we employ a grid search tailored for each baseline technique alongside 5-fold cross-validation to optimize hyperparameters. Further details on the best parameters can be found in Table 2.

3.5. Machine Learning Approach

In this section, we perform sentiment analysis on Arabic consumer reviews using various classifiers from the Python scikit-learn library. The classifiers include Linear Support Vector Machines (LSVMs), Passive Aggressive Classifiers (PACs), Multinomial Naïve Bayes (MNB), K-Nearest Neighbors (KNNs), Decision Trees (DTs), Random Forests (RFs), and Logistic Regression (LR). We employ GridSearchCV for hyperparameter tuning to ensure optimal performance. This approach aims to identify the most effective model for analyzing Arabic sentiments, as illustrated in Figure 1.

3.5.1. Linear Support Vector Machine

The LSVM is exceptionally well-suited for text classification tasks, including sentiment analysis, where distinguishing between positive and negative feedback is crucial. By efficiently identifying an optimal hyperplane in high-dimensional spaces, LSVMs excel at deciphering complex patterns in textual data. This ability stems from their linear decision-making process, which, despite its simplicity, effectively maximizes the margin between data classes while minimizing classification errors. The strength of LSVMs lies in their straightforward approach to handling data linearity, making them a robust option for accurate sentiment classification.

3.5.2. Multinomial Naïve Bayes

The MNB classifier excels in text classification and sentiment analysis by leveraging Bayes' theorem [34], simplifying complex high-dimensional data through the assumption of feature independence when given a class. This enables efficient handling of text as word vectors, focusing on word frequency to distinguish sentiments in reviews. Particularly adept with discrete data, MNB uses word counts or TF-IDF metrics, emphasizing significant terms, thus providing robust and effective sentiment classification. Despite its simplicity, MNB's probabilistic approach delivers powerful predictive capabilities, making it a fundamental tool in ML for analyzing textual sentiments.

3.5.3. Passive Aggressive Classifier

The PAC algorithm, a dynamic ML model, stands out in sentiment analysis. Its adaptable nature to shifting trends minimizes the need for frequent retraining upon encountering new data. This is particularly beneficial for Arabic's intricate morphology and dialectical diversity. PAC maintains stability and flexibility, ensuring consistent performance and precise classification. Its ability to significantly correct errors while retaining performance stability makes it ideal for analyzing social media and customer reviews in Arabic-speaking areas, offering valuable insights into public sentiment and market trends.

3.5.4. Logistic Regression

LR is a well-known supervised classification technique that goes beyond conventional regression by creating variables suggestive of event occurrence. The likelihood of categorizing a new instance is ascertained with the aid of this model. In order for LR to provide predicted probability values for binary or multi-class classification, a discrimination threshold between classes must be set [35]. The logistic function, which is crucial to this procedure, shapes an S-curve. The cost function yields the Sigmund form of LR, which defines its distinctive S-shaped curve.

3.5.5. Decision Tree

The DT algorithm is a practical tool for machine learning. Its strength lies in its ability to quickly and effectively classify and filter solutions, enabling results comparison and data item organization into a coherent tree-like hierarchy that supports the best possible decision-making. Internal nodes serve as decision points for input attribute testing in decision trees, which are multitiered tree structures. Passing through child nodes leads to the leaf node, which is the ultimate decision based on test results [36].

3.5.6. K-Nearest-Neighbor

KNN is a flexible supervised learning algorithm that finds the closest 'k' data points to predict with [37]. It is perfect for regression and classification. Selected 'k's must strike a balance between computational efficiency and precision in order for KNN to be effective. Although simple, KNN can be computationally intensive when dealing with large datasets; however, its application in tasks like sentiment analysis demonstrates its flexibility in handling a variety of data challenges.

3.5.7. Random Forest

RF uses multiple decision trees to support tasks like regression and classification. Overfitting is significantly decreased because every tree is trained on a range of data subsets. Flexibility is increased by combining multiple predictions with tunable hyperparameters like minimum leaf sample sizes, the number of trees (estimators), and depth bounds [37]. Due to its resilience and adaptability, RF has gained popularity in domains like image analysis, bioinformatics, and natural language processing. It has also proven to be quite accurate in handling complex datasets.

3.6. Deep Learning Approach

DL architectures, such as CNN and BiLSTM, demand sophisticated designs tailored to specific challenges and datasets. This necessity extends to precise preprocessing and architectural modifications. Adjusting hyperparameters—such as filter counts, layer depths, and units in each layer—is critical for optimizing model performance for targeted datasets [38]. The interaction of these hyperparameters with model performance is complex and often unpredictable, highlighting the intricacy of their configuration [39]. In our study, we focus on three DL models, CNN, BiLSTM, BiGRU, and a hybrid Arb-MCNN-Bi framework. These models were meticulously handcrafted during the design phase to enhance model generalization. They were selected specifically for their ability to efficiently process sequential and contextual text data, which is essential for conducting accurate sentiment analysis.

3.6.1. The Multilayer Convolutional Neural Network

The proposed MCNN model, illustrated in Figure 2, is designed to enhance performance in ASA by leveraging advanced techniques within the CNN framework. CNNs, initially developed for image recognition tasks inspired by biological research on visual perception, have shown significant potential in NLP, particularly for text classification. This model integrates an embedding layer, convolutional layers, normalization, max-pooling, dropout layers, and fully connected output layers, as detailed below:

1. Input Layer: The embedding layer is the initial component of the model, responsible for converting words in the input array into vector representations. Our model's input layer uses advanced word embeddings to capture the semantics and context of Arabic text. We employ AraBERT, Word2Vec, and fastText. AraBERT, pre-trained on extensive Arabic datasets, captures deep semantic relationships. Word2Vec, using the Skip-gram model with a window size of 5 and vector dimension of 300, reveals syntactic and semantic patterns. FastText, addressing Arabic's complex morphology with a window size of 40 and vector dimension of 300, enhances sentiment analysis by treating words as character n-grams. These methods provide robust inputs for our sentiment analysis model.
2. Convolutional Layer Blocks: The model includes three one-dimensional (1D) convolutional layers with batch normalization to enhance feature extraction. Using "same" padding ensures consistent input dimensions. Rectified Linear Unit (ReLU) activation functions are applied uniformly across all layers to capture non-linearities.
3. Normalization and Pooling: To ensure model stability and prevent overfitting, batch normalization layers are added after each convolutional layer. Then, max pooling 1D layers with appropriate pool sizes are added, effectively reducing the dimensionality of feature maps and increasing computational efficiency.
4. Dropout Regularization: To combat overfitting further, dropout layers are strategically placed after the convolutional layers. These layers randomly deactivate 2.5%, 10%, and 15% of neurons in the first, second, and third convolutional layers, respectively.
5. Fully Connected Layers: To facilitate comprehensive learning and classification, the model incorporates fully connected layers. This architecture includes a hidden layer with 1024 neurons and an output layer customized based on the dataset's class count. Activation functions, such as sigmoid for binary classification and softmax for multi-class classification, ensure accurate predictions across different scenarios.

The proposed CNN model for Arabic text classification demonstrates a carefully designed architecture integrating embedding layers, convolutional blocks, normalization, pooling, dropout layers, and fully connected layers. This model configuration is designed to effectively capture local features in Arabic text data and achieve robust classification performance.

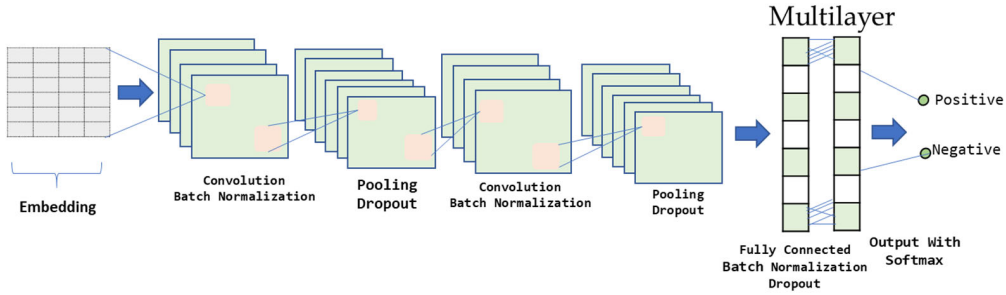

Figure 2. The Architecture of the Proposed MCNN.

3.6.2. Proposed BiGRU Model

The proposed BiGRU model, illustrated in Figure 3, builds on the implementation of Arabic sentiment analysis (ASA) using the Bidirectional Gated Recurrent Unit (BiGRU) architecture for binary classification, distinguishing between positive and negative sentiments.

(1) Input Layer: The input layer of the model utilizes advanced word embeddings to capture the semantics and context of Arabic text. We incorporate AraBERT, Word2Vec, and fastText for this purpose. AraBERT, pre-trained on extensive Arabic datasets, captures deep semantic relationships, while Word2Vec, with a Skip-gram model using a window size of 5 and a vector dimension of 300, reveals syntactic and semantic patterns in the language. FastText, with a window size of 40 and a vector dimension of 300, enhances sentiment analysis by addressing Arabic's complex morphology and treating words as character-level n-grams. These embedding techniques ensure robust input representations for our sentiment analysis model.

(2) Feature Extraction: The feature extraction phase is conducted using a 32-unit BiGRU layer, which processes the word embeddings bidirectionally. This architecture allows the model to capture both forward and backward contextual information, ensuring a more comprehensive understanding of the text and improving its ability to grasp intricate sentiments in Arabic.

(3) Classification Layers: After feature extraction, the BiGRU output is passed through classification layers. This stage involves two fully connected layers, starting with a hidden layer of 1024 neurons. To prevent overfitting and improve generalization, normalization layers and a dropout layer are employed. These components work together to refine the features extracted by the BiGRU and enhance model performance.

(4) Output Layer Configuration: The output layer is designed explicitly for binary classification, with a single neuron responsible for differentiating between positive and negative sentiments. This configuration ensures precise sentiment classification, improving the model's ability to handle the complexity of Arabic text while delivering accurate sentiment predictions.

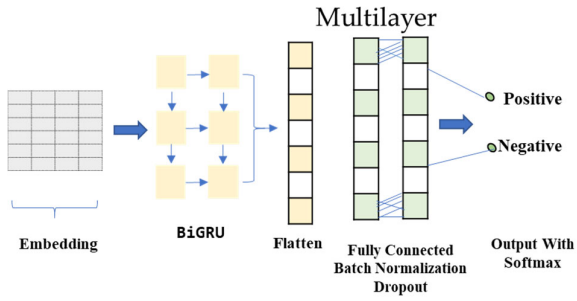

Figure 3. The architecture of the Proposed BiGRU Model for Arabic sentiment analysis.

3.6.3. The Proposed Arb-MCNN-Bi Model

The Arb-MCNN-Bi model, illustrated in Figure 4, is a fusion of transformer-based architecture and deep learning techniques, specifically designed to enhance Arabic sentiment analysis. This model combines the strengths of the AraBERT model, which provides context-aware word embeddings for Arabic text, with the robust feature extraction capabilities of a MCNN and the sequential processing power of a BiGRU.

(1) AraBERT: For feature extraction, this research employed AraBERT, a cutting-edge pre-trained language model renowned for its attention mechanism, which adeptly captures contextual word relationships. AraBERT is particularly powerful in deep learning models for sentiment analysis. The study utilized AraBERT's extensive configuration, featuring 768 hidden units and 12 attention heads, providing richer data and vocabulary compared to the base model.

The initial step in our text classification process involves tokenization, transforming text into a machine-readable format using the WordPiece tokenizer. The original AraBERT tokenizer [40] was trained with WordPiece tokenization, allowing words to be split into multiple subwords. However, due to the morphological complexity of Arabic, character and subword tokenizers are not well-suited for Arabic text. Consequently, we utilized two different pre-trained Arabic BERT tokenizers that employ word-level tokenization, applying a specific tokenizer to each dataset based on its context: Antoun et al. [17]'s tokenizer for social media datasets like Arabic–Jordanian tweets, and Safaya et al. [18]'s general-purpose tokenizer for other datasets, such as Goodreads and Booking.com reviews.

(2) Multichannel Convolutional Layers: To construct the multichannel convolutional architecture, three distinct convolutional layers were employed. Each layer is characterized by 128 filters and kernel sizes of 3, 4, and 5, along with the Rectified Linear Unit (Relu) activation function to address gradient issues.

(3) Padding Application: Following the convolutional operations, padding was applied to the outputs of the second and third layers. This ensured that the dimensions of the outputs remained uniform, facilitating concatenation in subsequent stages of the neural network architecture.

(4) Output Merging: The final step involved merging the outputs of the convolutional layers. This merging process provided a comprehensive feature extraction from the text data, which subsequent neural network layers could further utilize for accurate classification tasks.

(5) Normalization and Pooling: To enhance model stability and prevent overfitting, batch normalization layers are incorporated after each convolutional layer. Additionally, max pooling 1D layers with appropriate pool sizes are introduced to effectively reduce the dimensionality of feature maps and enhance computational efficiency. Following the merging of feature maps from different convolutional layers, max pooling, utilizing a 2×2 filter is executed. Max pooling serves multiple purposes within our neural network architecture. It significantly reduces dimensionality, improving computational efficiency and expediting data processing while retaining crucial features. This operation involves sliding the filter across the feature map and selecting the maximum value from each 2×2 area. Consequently, significant information is preserved, and important patterns in

the data are highlighted. The outcome is a pooled feature map with dimensions halved from the original, encapsulating essential features in a more concise format, ready for subsequent layers of the network.

(6) BiGRU: The BiGRU architecture in our model consists of two stacked BiGRU layers, each with 128 units, designed to capture sequential dependencies in both directions. By processing the input sequence both forward (past to future) and backward (future to past), the BiGRU layers can retain context from both earlier and later parts of the text, enhancing the model's ability to understand complex relationships in the data. The first BiGRU layer extracts temporal dependencies from the output of the convolutional layers, while the second BiGRU layer further refines this information, improving the model's ability to capture long-range patterns. This bidirectional processing ensures that at every step, the model has access to both forward and backward contextual information, significantly improving sentiment analysis performance by enabling a more comprehensive understanding of the input text.

(7) Fully Connected Layer and Output Layer: To improve the sentiment analysis model's performance, a fully connected layer is added after the BiGRU layers. This enhances feature extraction, enabling the model to detect intricate patterns and relationships in input sequences. With this addition, the model gains the capacity to capture nuanced dependencies, potentially boosting its effectiveness in sentiment analysis tasks. Finally, the model is compiled with a sparse categorical cross-entropy loss function, an Adam optimizer, and accuracy metrics for evaluation.

The Arb-MCNN-Bi model architecture effectively combines the CNN's ability to extract local features with BiGRU's strength in handling sequential dependencies, making it well-suited for the complex task of Arabic sentiment classification.

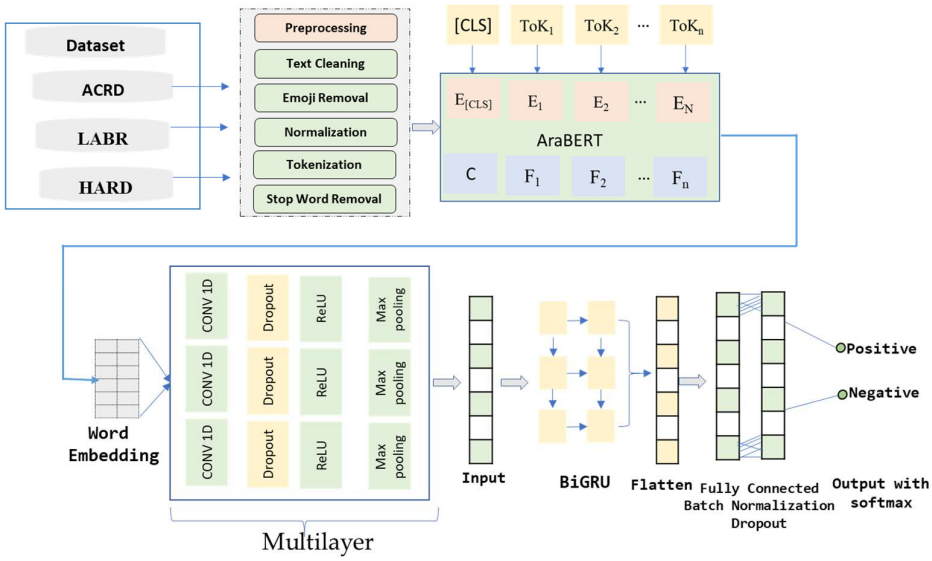

Figure 4. The architecture of the Proposed Arb-MCNN-Bi Model for Arabic sentiment analysis.

4. Results of Experiments

4.1. Performance Matrix

This research utilized multiple performance metrics to evaluate the effectiveness of the models in sentiment analysis [41]. These metrics offer a comprehensive insight into the models' performances across different dimensions. Below are the definitions and equations for each parameter:

True Positive (TP): This refers to instances where the classifier correctly identifies a positive review. For example, when a review is positive, the classifier accurately predicts it as such.

True Negative (TN): TN denotes cases where negative reviews are correctly identified as negative.

False Positive (FP): FP occurs when a review is incorrectly predicted as positive when it is negative.

False Negative (FN): FN happens when a review is wrongly classified as negative despite it being positive.

Accuracy measures the overall correctness of the model and is calculated by:

$$\text{Accuracy} = \frac{\text{TP} + \text{TN}}{\text{Total Reviews}} \tag{1}$$

Precision indicates how many of the positive predictions were positive and is calculated by:

$$\text{Precision} = \frac{\text{TP}}{\text{TP} + \text{FP}} \tag{2}$$

Recall, also known as sensitivity, measures the ability of the model to detect positive reviews and is calculated by:

$$\text{Recall} = \frac{\text{TP}}{\text{TP} + \text{FN}} \tag{3}$$

F1-Score is the harmonic mean of precision and recall, providing a balance between them, calculated as:

$$\text{F1} - \text{Score} = 2 \times \frac{\text{Precision} \times \text{Recall}}{\text{Precision} \times \text{Recal}} \tag{4}$$

4.2. Implementation Details

We implemented our model in Python 3.9.13, using TensorFlow version 2.17.0. The dataset was divided into 70% training, 15% validation, and 15% test sets, as shown in Table 1. The hyperparameters for each dataset in our models are detailed in Tables 2 and 3.

Table 1. Distribution of Sentiment Analysis Data Across Training, Validation, and Testing Sets.

Datasets	Sentiment	Training 70%	Validation 15%	Testing 15%	Total
ACRD	Positive	11,970	2565	2565	34,200
	Negative	11,970	2565	2565	
HARD	Positive	32,795	7027	7027	93,698
	Negative	32,795	7027	7027	
LABR	Positive	5511	1188	1188	15,774
	Negative	5511	1188	1188	

Table 2. Best hyper-parameters and cross-validation (CV) for conventional ML models.

Models	ACRD	HARD
MNB	{'alpha': 0.1, 'fit_prior': False}	{'alpha': 0.1, 'fit_prior': False}
LSVM	{'estimator__C': 1, 'estimator__max_iter': 1000}	{'estimator__C': 0.1, 'estimator__max_iter': 1000}
PAC	{'estimator__C': 0.01, 'estimator__max_iter': 1000, 'estimator__tol': 0.0001}	{'estimator__C':0.1,'estimator__max_iter':1000, 'estimator__tol': 0.001}
LR	{'C': 10, 'penalty': 'l2', 'solver': 'saga'}	{'C': 1, 'penalty': 'l2', 'solver': 'liblinear'}
DT	{'criterion':'entropy','max_depth':None,'min_samples_leaf':1, 'min_samples_split': 5, 'splitter': 'best'}	{'criterion': 'gini', 'max_depth': 30, 'min_samples_leaf': 1, 'min_samples_split': 2, 'splitter': 'best'}
KNN	{'metric':'euclidean','n_neighbors':7,'weights':'distance'}	{'metric':'euclidean','n_neighbors': 3,'weights': 'uniform'}
RF	{'bootstrap': False, 'max_depth': None, 'min_samples_leaf': 1, 'min_samples_split': 2, 'n_estimators': 100}	'bootstrap': False, 'max_depth': None, 'min_samples_leaf': 2, 'min_samples_split': 2, 'n_estimators': 100

Table 3. Hyperparameters of the Proposed Model.

Parameters	ACRD	HARD	LABR
Embedding model	AraBERT, FastText,Word2VC	AraBERT, FastText,Word2VC	AraBERT, FastText,Word2VC
Conv1D1 (Filter,Kernelsize)	(128, 3)	(128, 3)	(128, 3)
Conv1D2 (Filter,Kernelsize)	(128, 4)	(128, 4)	(128, 4)
Conv1D3 (Filter,Kernelsize)	(128, 5)	(128, 5)	(128, 5)
Batch size	128	128	128
Learning rate	0.00001	0.00001	0.00001
Max. length	64	64	64
Optimizer	Adam	Adam	Adam
Dropout1D	0.1, 0.15, 0.25	0.1, 0.15, 0.25	0.1, 0.15, 0.25
BiGRU	128	128	128
DropoutBi	0.5	0.5	0.5
Activation function	ReLU	ReLU	ReLU
Output function	Softmax	Softmax	Softmax
Epochs	25	15	20

4.3. Results of the Experiments

In this section, we discuss the results of our studies comparing the effects of different word embeddings on ASA. Tables 4–6 display the comparative performance of various models using different word embeddings on datasets containing Arabic text, specifically the ACRD, HARD, and LABR datasets. The models evaluated include the proposed model (Arb-MCNN-Bi), MCNN-BiGRU, MCNN, BiGRU, and various ML models. Each model's performance was measured across several metrics: precision, recall, F1-score, and accuracy.

Table 4. Performance Comparison of Various Models for Arabic Sentiment Analysis Using Different Feature Extraction Techniques on ACRD.

Model	Feature Extraction	Performance			
		Precision	Recall	F1-Score	Accuracy
LSVM	N-Gram, TF-IDF	91.18	92.15	91.66	91.98
PAC	N-Gram, TF-IDF	91.37	91.64	91.50	91.51
MNB	N-Gram, TF-IDF	92.45	92.21	92.32	92.34
LR	N-Gram, TF-IDF	92.83	92.81	92.82	92.95
DT	N-Gram, TF-IDF	83.47	83.35	83.40	83.59
KNN	N-Gram, TF-IDF	90.45	89.65	90.05	90.42
RF	N-Gram, TF-IDF	91.73	91.86	91.79	92.53
MCNN	Word2Vec(SG)	95.43	95.28	95.35	95.43
	FastText(SG)	96.11	96.13	96.12	96.14
	AraBERT	96.76	96.55	96.65	96.82
BiLSTM	Word2Vec(SG)	95.14	95.17	95.15	95.22
	FastText(SG)	95.61	95.68	95.64	95.72
	AraBERT	96.10	95.98	96.04	96.08
BiGRU	Word2Vec(SG)	95.21	95.16	95.18	95.24
	FastText(SG)	95.23	95.20	95.21	95.25
	AraBERT	96.13	96.01	96.06	96.11
Arb-MCNN-Bi	AraBERT	96.87	96.90	96.89	96.92

The comparative study on ASA using the ACRD reveals that DL models significantly outperform traditional ML algorithms across key performance metrics—precision, recall, F1-score, and accuracy. Traditional models such as Logistic Regression and Multinomial Naive Bayes achieved commendable results, with Logistic Regression reaching the highest accuracy among them at 92.95%. However, DL models, particularly those employing advanced feature extraction techniques like the transformer-based AraBERT,

demonstrated superior performance. The Arb-MCNN-Bi hybrid model, combined with AraBERT, emerged as the top performer, achieving an impressive accuracy of 96.92%, along with high precision, recall, and F1-score values. This underscores the efficacy of leveraging sophisticated deep-learning architectures and transformer-based models for more accurate sentiment analysis in Arabic.

Table 5. Performance Comparison of Various Models for Arabic sentiment analysis Using Different Feature Extraction Techniques on HARD.

Model	Feature Extraction	Performance			
		Precision	Recall	F1-Score	Accuracy
LSVM	N-Gram, TF-IDF	81.44	87.74	84.43	84.92
PAC	N-Gram, TF-IDF	82.30	86.88	84.53	84.59
MNB	N-Gram, TF-IDF	88.25	84.22	86.19	86.58
LR	N-Gram, TF-IDF	86.91	89.91	88.38	88.45
DT	N-Gram, TF-IDF	75.85	87.19	81.13	79.83
KNN	N-Gram, TF-IDF	76.75	76.50	76.64	76.88
RF	N-Gram, TF-IDF	85.40	85.95	85.68	85.70
MCNN	Word2Vec(SG)	90.12	89.87	89.99	90.02
	FastText(SG)	90.14	90.04	90.09	90.24
	AraBERT	92.54	91.15	91.84	92.11
BiLSTM	Word2Vec(SG)	91.81	92.14	91.97	92.04
	FastText(SG)	92.14	92.45	92.29	92.54
	AraBERT	94.15	94.54	94.34	94.75
BiGRU	Word2Vec(SG)	92.22	90.03	91.11	91.4
	FastText(SG)	93.53	93.22	93.37	93.44
	AraBERT	94.05	94.11	94.08	94.13
Arb-MCNN-Bi	AraBERT	96.57	96.56	96.56	96.68

The performance analysis of various models for ASA on the HARD dataset shows that DL models consistently outperform traditional ML algorithms. Logistic Regression and Multinomial Naive Bayes achieved notable accuracy rates of 88.45% and 86.58%, respectively, with Logistic Regression having the highest F1-score among traditional models at 88.38%. The Arb-MCNN-Bi hybrid model, particularly when using AraBERT for feature extraction, demonstrated the best performance with a precision of 96.57%, recall of 96.56%, F1-score of 96.56%, and accuracy of 96.68%. This highlights the superiority of advanced DL architectures and transformer-based feature extraction techniques like AraBERT in ASA on the HARD.

The performance comparison of various models for ASA on the LABR dataset demonstrates the effectiveness of DL models over traditional ML algorithms. Traditional models like Logistic Regression and Multinomial Naive Bayes performed relatively well, achieving F1 scores of 80.11% and 80.12%, respectively. However, DL models, especially those utilizing transformer-based feature extraction techniques like AraBERT, significantly outperformed them. The Arb-MCNN-Bi hybrid model feature extraction stood out with the highest performance, attaining a precision of 92.37%, recall of 92.26%, F1-score of 92.31%, and accuracy of 92.93%. This highlights the superior capability of transformer-based models in capturing and analyzing the complexities of sentiment in Arabic text, making them the most effective choice for this task.

Table 6. Performance Comparison of Various Models for Arabic Sentiment Analysis Using Different Feature Extraction Techniques on the LABR Dataset.

Model	Feature Extraction	Performance			
		Precision	Recall	F1-Score	Accuracy
LSVM	N-Gram, TF-IDF	78.12	78.02	78.07	78.14
PAC	N-Gram, TF-IDF	78.45	78.55	78.50	78.78
MNB	N-Gram, TF-IDF	80.11	80.14	80.12	80.23
LR	N-Gram, TF-IDF	81.02	81.21	80.11	80.18
DT	N-Gram, TF-IDF	70.24	71.05	70.64	71.12
KNN	N-Gram, TF-IDF	71.18	71.15	71.16	71.24
RF	N-Gram, TF-IDF	79.11	79.14	79.12	79.25
MCNN	Word2Vec(SG)	81.15	81.08	81.11	81.24
	FastText(SG)	81.55	81.75	81.65	81.88
	AraBERT	82.45	82.56	82.50	82.74
BiLSTM	Word2Vec(SG)	82.14	82.75	82.44	83.02
	FastText(SG)	82.87	83.17	83.02	83.48
	AraBERT	84.45	84.46	84.45	84.57
BiGRU	Word2Vec(SG)	82.19	81.16	81.67	82.14
	FastText(SG)	83.78	83.01	83.39	84.28
	AraBERT	85.92	85.74	85.83	85.86
Arb-MCNN-Bi	AraBERT	92.37	92.26	92.31	92.93

4.4. Comparison of the Arb-MCNN-Bi Method with State-of-the-Art Methods on HARD and LABR Dataset

We evaluated our proposed Arb-MCNN-Bi model against existing state-of-the-art methods on the HARD and LABR datasets. The Arb-MCNN-Bi consistently demonstrated superior performance across multiple metrics. On the HARD dataset, it achieved a remarkable accuracy of 96.23%, outperforming models such as those by Antoun et al. [17], which utilize ARABERT. Similarly, the Arb-MCNN-Bi excelled on the LABR dataset with an accuracy of 91.76%, surpassing benchmarks set by Choukhi et al. [19], which employ BERT. These results highlight the Arb-MCNN-Bi's effectiveness in handling diverse Arabic dialects and its robust performance in sentiment analysis tasks compared to current state-of-the-art approaches, as shown in Table 7.

Table 7. Comparison of the Arb-MCNN-Bi Method with State-of-the-Art Methods on HARD and LABR Dataset.

Dataset	RF.	Model	Recall	Precision	F1-Score	Accuracy
HARD	Antoun et al. [17]	ARABERT	-	-	-	96.20
	Elhassa et al. [16]	CNN-LSTM	90.36	90.47	90.42	90.38
	Muaad, et al. [11]	CNN	93.23	93.23	93.23	93.58
	ElJundi et al. [21]	hULMonA	-	-	95.70	95.70
	Choukhi et al. [19]	BERT	-	-	-	95.00
	Our model	Arb-MCNN-Bi	96.56	96.57	96.56	96.68
LABR	Antoun et al. [17]	ARABERT	-	-	-	86.70
	Choukhi et al. [19]	BERT	-	-	-	87.00
	Abu Kwaik et al. [15]	CNN-LSTM	-	-	-	81.14
	Our model	Arb-MCNN-Bi	92.26	92.37	92.31	92.93

5. Conclusions

Our research addresses the significant challenge of performing sentiment analysis on Arabic text, which is complicated by the language's unique characteristics. We propose a hybrid model combining AraBERT, MCNN, and BiGRU networks to analyze Arabic sentiments effectively. Our model leverages AraBERT for rich contextual understanding,

MCNN for enhanced feature extraction, and BiGRU for capturing long-term dependencies, achieving high accuracy rates across multiple Arabic datasets.

Moreover, we compared the proposed model with various ML and DL algorithms, using advanced NLP techniques, such as TF-IDF, n-gram, Word2Vec (Skip-grams), and fastText (Skip-grams), across three Arabic datasets: ACRD, LABR, and HARD. The Arb-MCNN-Bi model achieved remarkable accuracies of 96.92%, 96.68%, and 92.93% on the ACRD, HARD, and LABR datasets, respectively. These results highlight the effectiveness of our approach in analyzing Arabic text data.

Through a comprehensive comparative analysis, our Arb-MCNN-Bi model has demonstrated superior performance and robustness compared to various traditional ML and DL algorithms. This work contributes substantially to the field of ASA, providing a robust tool for businesses to better understand and respond to customer feedback in the Arabic language.

Author Contributions: Conceptualization, H.A. and F.Z.; methodology H.A. and F.Z.; software, H.A.; validation, H.A., A.M. and F.Z.; formal analysis, H.A. and F.Z.; investigation, H.A.; resources, H.A. and F.Z.; data curation, H.A. and F.Z.; writing—original draft preparation, H.A.; writing—review and editing, H.A., A.M. and F.Z.; visualization, H.A.; supervision, F.Z.; project administration, H.A. and F.Z.; funding acquisition, H.A. All authors have read and agreed to the published version of the manuscript.

Funding: This research received no external funding.

Data Availability Statement: Data can be shared upon reasonable request from corresponding author.

Conflicts of Interest: The authors declare no conflicts of interest.

References

1. Solangi, Y.A.; Solangi, Z.A.; Aarain, S.; Abro, A.; Mallah, G.A.; Shah, A. Review on Natural Language Processing (NLP) and Its Toolkits for Opinion Mining and Sentiment Analysis. In Proceedings of the 2018 IEEE 5th International Conference on Engineering Technologies and Applied Sciences (ICETAS), Bangkok, Thailand, 22–23 November 2018; pp. 1–4.
2. Abdul-Mageed, M.; Elmadany, A.; Zhang, C.; Nagoudi, E.M.B.; Bouamor, H.; Habash, N. NADI 2023: The Fourth Nuanced Arabic Dialect Identification Shared Task. *arXiv* **2023**, arXiv:2310.16117.
3. Fang, L.; Zeng, T.; Liu, C.; Bo, L.; Dong, W.; Chen, C. Transformer-Based Conditional Variational Autoencoder for Controllable Story Generation. *arXiv* **2021**, arXiv:2101.00828.
4. Tian, W.; Yi, L.; Liu, W.; Huang, W.; Ma, G.; Zhang, Y. Ground Radar Precipitation Estimation with Deep Learning Approaches in Meteorological Private Cloud. *J. Cloud Comput.* **2020**, *9*, 22. [CrossRef]
5. Naseem, U.; Razzak, I.; Musial, K.; Imran, M. Transformer Based Deep Intelligent Contextual Embedding for Twitter Sentiment Analysis. *Future Gener. Comput. Syst.* **2020**, *113*, 58–69. [CrossRef]
6. Habimana, O.; Li, Y.; Li, R.; Gu, X.; Yu, G. Sentiment Analysis Using Deep Learning Approaches: An Overview. *Sci. China Inf. Sci.* **2020**, *63*, 1–36. [CrossRef]
7. Musleh, D.A.; Alkhwaja, I.; Alkhwaja, A.; Alghamdi, M.; Abahussain, H.; Alfawaz, F.; Min-Allah, N.; Abdulqader, M.M. Arabic Sentiment Analysis of Youtube Comments: Nlp-Based Machine Learning Approaches for Content Evaluation. *Big Data Cogn. Comput.* **2023**, *7*, 127. [CrossRef]
8. Hadwan, M.; Al-Hagery, M.; Al-Sarem, M.; Saeed, F. Arabic Sentiment Analysis of Users' Opinions of Governmental Mobile Applications. *Comput. Mater. Contin.* **2022**, *72*, 4675–4689. [CrossRef]
9. Alakrot, A.; Murray, L.; Nikolov, N.S. Towards Accurate Detection of Offensive Language in Online Communication in Arabic. *Procedia Comput. Sci.* **2018**, *142*, 315–320. [CrossRef]
10. Alharbi, A.; Kalkatawi, M.; Taileb, M. Arabic Sentiment Analysis Using Deep Learning and Ensemble Methods. *Arab. J. Sci. Eng.* **2021**, *46*, 8913–8923. [CrossRef]
11. Muaad, A.Y.; Jayappa, H.; Al-antari, M.A.; Lee, S. ArCAR: A Novel Deep Learning Computer-Aided Recognition for Character-Level Arabic Text Representation and Recognition. *Algorithms* **2021**, *14*, 216. [CrossRef]
12. Gwad, W.H.G.; Ismael, I.M.I.; Gültepe, Y. Twitter Sentiment Analysis Classification in the Arabic Language Using Long Short-Term Memory Neural Networks. *Int. J. Eng. Adv. Technol.* **2020**, *9*, 235–239. [CrossRef]
13. Mohammed, A.; Kora, R. Deep Learning Approaches for Arabic Sentiment Analysis. *Soc. Netw. Anal. Min.* **2019**, *9*, 52. [CrossRef]

14. Ombabi, A.H.; Ouarda, W.; Alimi, A.M. Deep Learning CNN–LSTM Framework for Arabic Sentiment Analysis Using Textual Information Shared in Social Networks. *Soc. Netw. Anal. Min.* **2020**, *10*, 53. [CrossRef]
15. Abu Kwaik, K.; Saad, M.; Chatzikyriakidis, S.; Dobnik, S. LSTM-CNN Deep Learning Model for Sentiment Analysis of Dialectal Arabic. In *Arabic Language Processing: From Theory to Practice: 7th International Conference, ICALP 2019, Nancy, France, 16–17 October 2019*; Springer: Berlin/Heidelberg, Germany, 2019; pp. 108–121.
16. Elhassan, N.; Varone, G.; Ahmed, R.; Gogate, M.; Dashtipour, K.; Almoamari, H.; El-Affendi, M.A.; Al-Tamimi, B.N.; Albalwy, F.; Hussain, A. Arabic Sentiment Analysis Based on Word Embeddings and Deep Learning. *Computers* **2023**, *12*, 126. [CrossRef]
17. Antoun, W.; Baly, F.; Hajj, H. Arabert: Transformer-Based Model for Arabic Language Understanding. *arXiv* **2020**, arXiv:2003.00104.
18. Safaya, A.; Abdullatif, M.; Yuret, D. Kuisail at Semeval-2020 Task 12: Bert-Cnn for Offensive Speech Identification in Social Media. *arXiv* **2020**, arXiv:2007.13184.
19. Chouikhi, H.; Chniter, H.; Jarray, F. *Arabic Sentiment Analysis Using BERT Model*; Springer: Berlin/Heidelberg, Germany, 2021; pp. 621–632.
20. El Moubtahij, H.; Abdelali, H.; Tazi, E.B. AraBERT Transformer Model for Arabic Comments and Reviews Analysis. *IAES Int. J. Artif. Intell.* **2022**, *11*, 379–387. [CrossRef]
21. ElJundi, O.; Antoun, W.; El Droubi, N.; Hajj, H.; El-Hajj, W.; Shaban, K. Hulmona: The Universal Language Model in Arabic. In Proceedings of the Fourth Arabic Natural Language Processing Workshop, Florence, Italy, 1 August 2019; pp. 68–77.
22. Alghamdi, H.M. Unveiling Sentiments: A Comprehensive Analysis of Arabic Hajj-Related Tweets from 2017–2022 Utilizing Advanced AI Models. *Big Data Cogn. Comput.* **2024**, *8*, 5. [CrossRef]
23. Habbat, N.; Nouri, H.; Anoun, H.; Hassouni, L. *Using AraGPT and Ensemble Deep Learning Model for Sentiment Analysis on Arabic Imbalanced Dataset*; EDP Sciences: Les Ulis, France, 2023; Volume 52, p. 02008.
24. Boulouard, Z.; Ouaissa, M.; Ouaissa, M.; Krichen, M.; Almutiq, M.; Gasmi, K. Detecting Hateful and Offensive Speech in Arabic Social Media Using Transfer Learning. *Appl. Sci.* **2022**, *12*, 12823. [CrossRef]
25. Petrescu, A.; Truică, C.-O.; Apostol, E.-S. Sentiment Analysis of Events in Social Media. In Proceedings of the 2019 IEEE 15th International Conference on Intelligent Computer Communication and Processing (ICCP), Cluj-Napoca, Romania, 5–7 September 2019; pp. 143–149.
26. Mitroi, M.; Truică, C.-O.; Apostol, E.-S.; Florea, A.M. Sentiment Analysis Using Topic-Document Embeddings. In Proceedings of the 2020 IEEE 16th International Conference on Intelligent Computer Communication and Processing (ICCP), Cluj-Napoca, Romania, 3–5 September 2020; pp. 75–82.
27. Truică, C.-O.; Apostol, E.-S.; Șerban, M.-L.; Paschke, A. Topic-Based Document-Level Sentiment Analysis Using Contextual Cues. *Mathematics* **2021**, *9*, 2722. [CrossRef]
28. Petrescu, A.; Truică, C.-O.; Apostol, E.-S.; Paschke, A. EDSA-Ensemble: An Event Detection Sentiment Analysis Ensemble Architecture. *arXiv* **2023**, arXiv:2301.12805. [CrossRef]
29. Apostol, E.-S.; Pisică, A.-G.; Truică, C.-O. ATESA-B {\AE} RT: A Heterogeneous Ensemble Learning Model for Aspect-Based Sentiment Analysis. *arXiv* **2023**, arXiv:2307.15920.
30. Elnagar, A.; Khalifa, Y.S.; Einea, A. Hotel Arabic-Reviews Dataset Construction for Sentiment Analysis Applications. In *Intelligent Natural Language Processing: Trends and Applications*; Springer: Berlin/Heidelberg, Germany, 2018; pp. 35–52.
31. Aly, M.; Atiya, A. Labr: A Large Scale Arabic Book Reviews Dataset. In Proceedings of the 51st Annual Meeting of the Association for Computational Linguistics (Volume 2: Short Papers), Sofia, Bulgaria, 4–9 August 2013; pp. 494–498.
32. Hiraoka, T.; Shindo, H.; Matsumoto, Y. Stochastic Tokenization with a Language Model for Neural Text Classification. In Proceedings of the 57th Annual Meeting of the Association for Computational Linguistics, Florence, Italy, 28 July–2 August 2019; Korhonen, A., Traum, D., Màrquez, L., Eds.; Association for Computational Linguistics: Florence, Italy, 2019; pp. 1620–1629.
33. Hosomi, N.; Sakti, S.; Yoshino, K.; Nakamura, S. Deception Detection and Analysis in Spoken Dialogues Based on FastText. In Proceedings of the 2018 Asia-Pacific Signal and Information Processing Association Annual Summit and Conference (APSIPA ASC), Honolulu, HI, USA, 12–15 November 2018; pp. 139–142.
34. Sarker, I.H. A Machine Learning Based Robust Prediction Model for Real-Life Mobile Phone Data. *Internet Things* **2019**, *5*, 180–193. [CrossRef]
35. Wang, Y.; Zhou, Z.; Jin, S.; Liu, D.; Lu, M. Comparisons and Selections of Features and Classifiers for Short Text Classification. *IOP Conf. Ser. Mater. Sci. Eng.* **2017**, *261*, 012018. [CrossRef]
36. Chollet, F. Xception: Deep Learning with Depthwise Separable Convolutions. In Proceedings of the IEEE Conference on Computer Vision and Pattern Recognition (CVPR), Honolulu, HI, USA, 21–26 July 2017; pp. 1251–1258.
37. Singh, A.; Halgamuge, M.N.; Lakshmiganthan, R. Impact of Different Data Types on Classifier Performance of Random Forest, Naive Bayes, and k-Nearest Neighbors Algorithms. *Int. J. Adv. Comput. Sci. Appl.* **2017**, *8*, 1–10. [CrossRef]
38. Ahmed, R.; Gogate, M.; Tahir, A.; Dashtipour, K.; Al-Tamimi, B.; Hawalah, A.; El-Affendi, M.A.; Hussain, A. Novel Deep Convolutional Neural Network-Based Contextual Recognition of Arabic Handwritten Scripts. *Entropy* **2021**, *23*, 340. [CrossRef]
39. Vasili, R.; Xhina, E.; Ninka, I.; Terpo, D. Sentiment Analysis on Social Media for Albanian Language. *Open Access Libr. J.* **2021**, *8*, 1–31. [CrossRef]

40. Devlin, J.; Chang, M.-W.; Lee, K.; Toutanova, K. Bert: Pre-Training of Deep Bidirectional Transformers for Language Understanding. *arXiv* **2018**, arXiv:1810.04805.
41. Truica, C.-O.; Leordeanu, C.A. Classification of an Imbalanced Data Set Using Decision Tree Algorithms. *Univ. Politech. Buchar. Sci. Bull. Ser. C Electr. Eng. Comput. Sci* **2017**, *79*, 69–84.

Disclaimer/Publisher's Note: The statements, opinions and data contained in all publications are solely those of the individual author(s) and contributor(s) and not of MDPI and/or the editor(s). MDPI and/or the editor(s) disclaim responsibility for any injury to people or property resulting from any ideas, methods, instructions or products referred to in the content.